ITEM NO.	DESCRIPTION	QTY.
1	SVGA KEYSTONE ADAPTER	1
2	INSTRUCTION SHEET	1

CATALOG NUMBER	HOUSING COLOR	DESCRIPTION
SF15ST	WHITE	SVGA SCREW TERM KEYSTONE ADAPTER

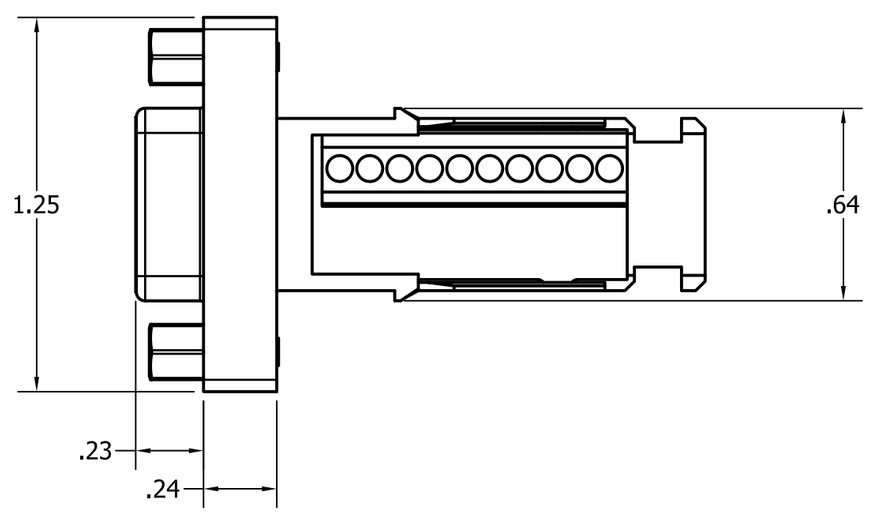

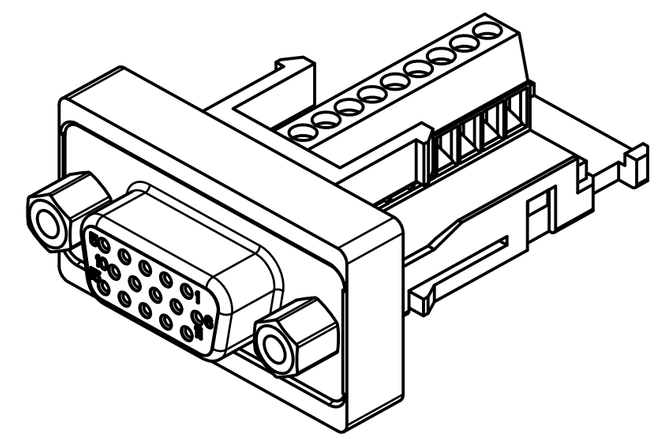

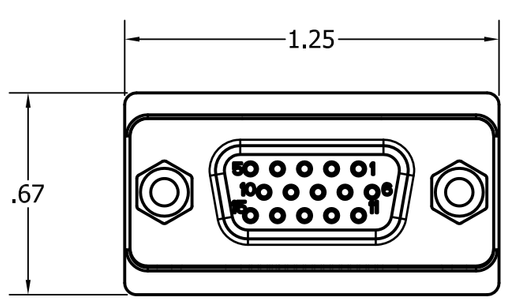

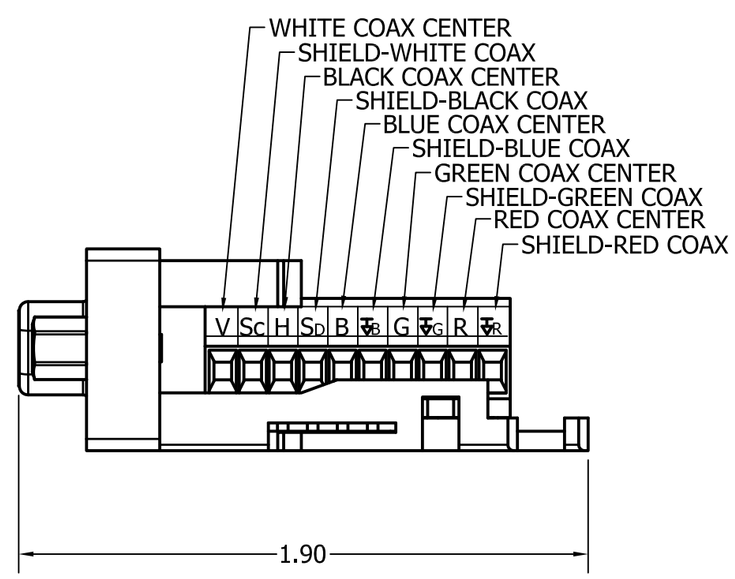

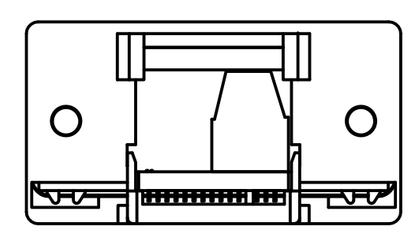

NOTES:
1. COMPATIBLE WITH ALL HPW PRODUCTS THAT CONTAIN A KEYSTONE OPENING.
2. RECOMMENDED FOR USE WITH 5 CONDUCTOR MINI-COAX 75 OHM CABLE.
3. SPECIFICATIONS SUBJECT TO CHANGE WITHOUT NOTICE.

REV.	ECN	DATE	DESCRIPTION	CHG BY	APPD BY
1	17970	7/18/12	INITIAL RELEASE	CG	

Created on AUTOCAD

DIMENSIONING AND TOLERANCE PER ANSI Y14.5M-1982
UNLESS OTHERWISE SPECIFIED, DIMENSIONS ARE IN INCHES (MM).
TOLERANCES
.XX = ±.01 (.25)
.XXX = ±.005 (.127)
.XXXX = ±.0025 (.0635)
ANGLE TOL ±1°

IN ACCEPTING OUR DRAWINGS, BLUEPRINTS, OR SUPPORTING DOCUMENTATION FOR QUOTATION OR OTHER PURPOSES, YOU AGREE NOT TO DISCLOSE TO OTHERS THE IDEAS, INFORMATION, OR DESIGNS SHOWN HEREIN, AND THAT YOU WILL MAKE NO USE OF SAME WITHOUT PERMISSION

PROJECT REFERENCE: 014-12
MATERIAL: SEE NOTES
DRAWN BY: C. GRIBBLE 7/18/12
CHECKED BY:
APPROVED BY:

Hubbell Premise Wiring
HUBBELL INCORPORATED (Delaware)
23 CLARA DRIVE, SUITE 103 MYSTIC, CT 06355

TITLE: SVGA KEYSTONE ADAPTER SCREW TERMINAL

SIZE: C
DRAWING NO. HWS13055C
REV. 1
SCALE: 1/1
SHEET 1 OF 1